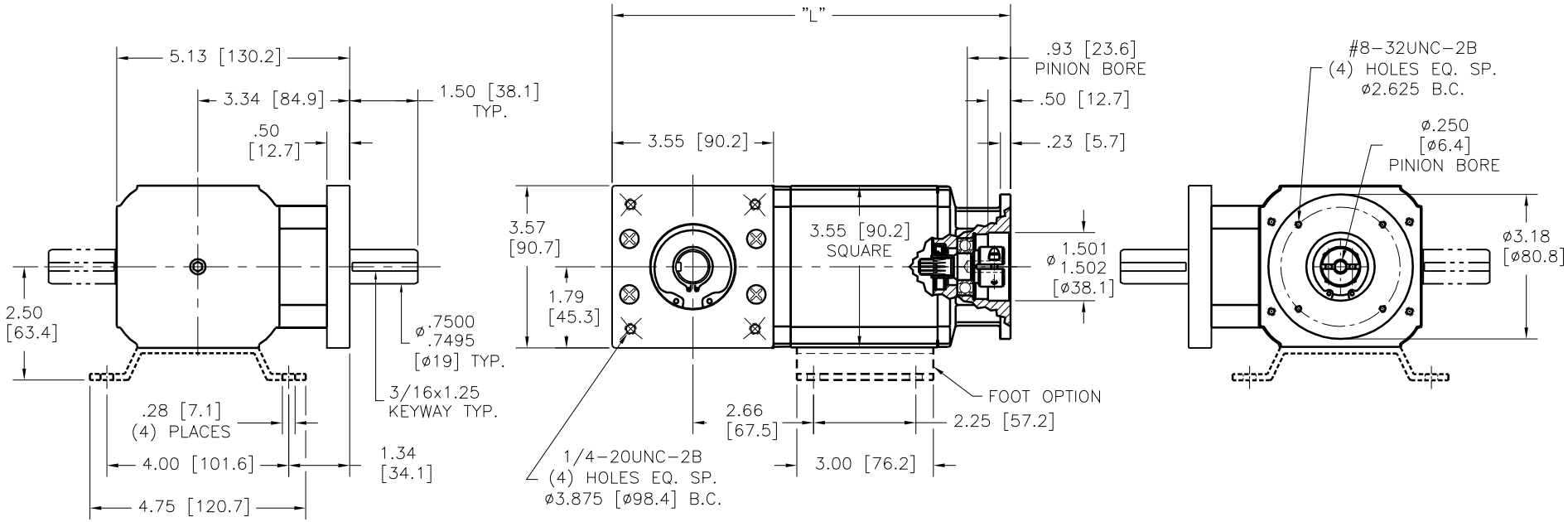

NOTES:

1. ALL DIMENSIONS ARE NOMINAL.
2. [mm] = MILLIMETERS.

MODEL	RATIO	"L"
RP73__ (NEMA 23)	5:1 – 61:1	8.77 [223]
	90:1 – 377:1	9.38 [238]

GROSCHOPP
ELECTRIC MOTORS • REDUCERS • GEAR MOTORS • MOTOR SETS

RP73__
(NEMA 23)
CATALOG STANDARD

REV: 2
DATE: 12-22-03

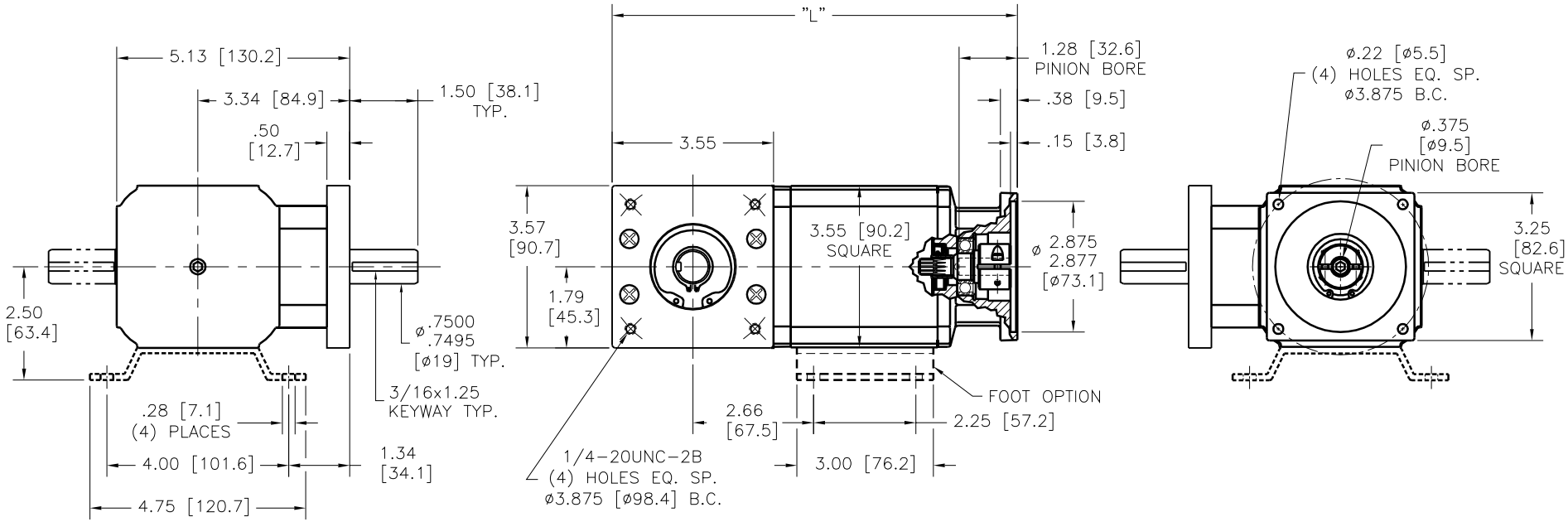

NOTES:

1. ALL DIMENSIONS ARE NOMINAL.
2. [mm] = MILLIMETERS.

MODEL	RATIO	"L"
RP73__ (NEMA 34)	5:1 – 61:1	8.92 [227]
	90:1 – 377:1	9.53 [242]

GROSCHOPP
ELECTRIC MOTORS • REDUCERS • GEAR MOTORS • MOTOR SETS

RP73__
(NEMA 34)
CATALOG STANDARD

REV: 2
DATE: 12-22-03