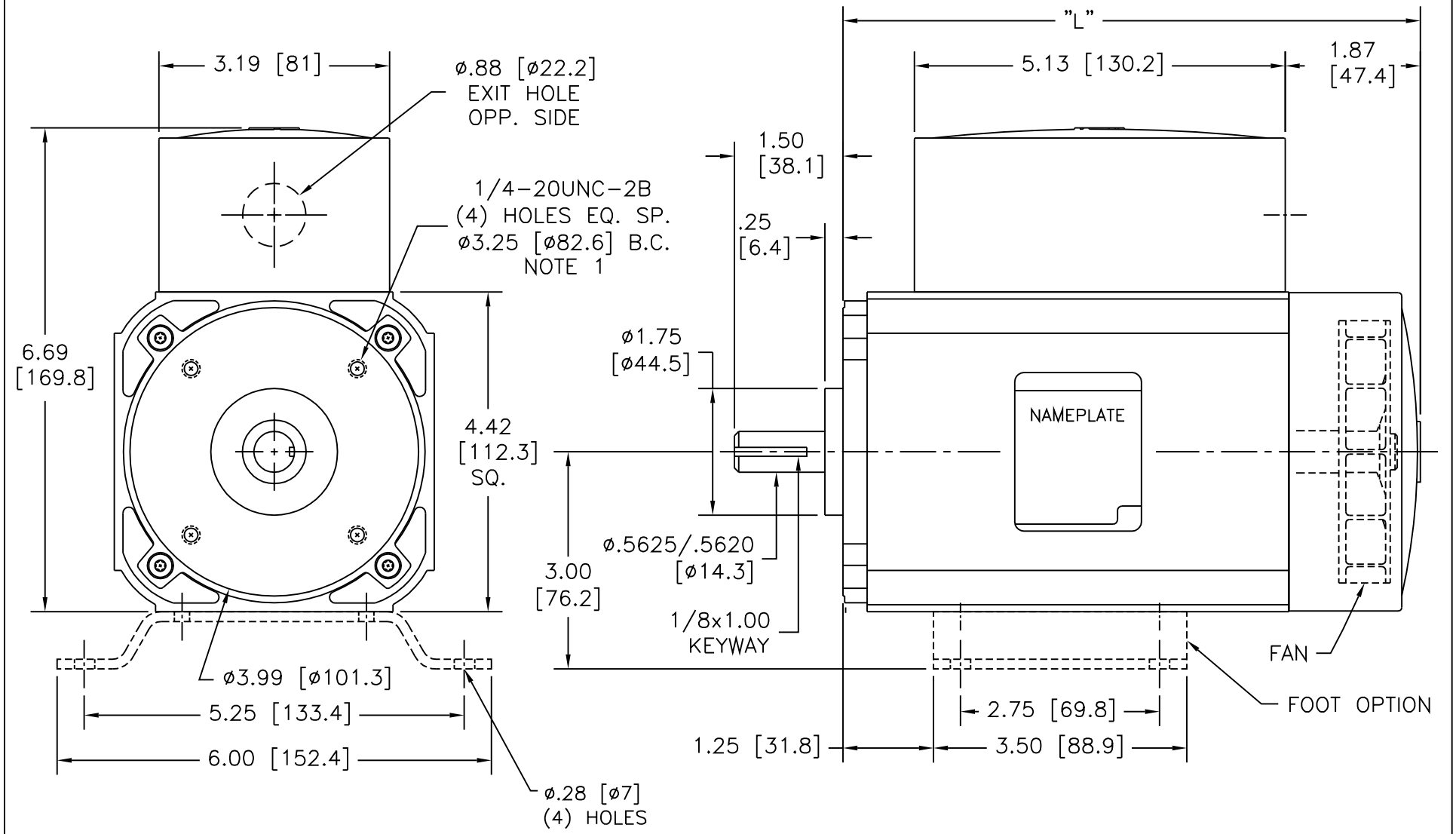

NOTES:

1. BOLT DEPTH NOT TO EXCEED 7/16" FROM END BELL FACE.
2. ALL DIMENSIONS ARE NOMINAL.
3. [mm] = MILLIMETERS.

MODEL	"L"
AC10060FC	7.99 [203]
AC10080FC	8.78 [223]

GROSCHOPP
ELECTRIC MOTORS • REDUCERS • GEAR MOTORS • MOTOR SETS

AC100__FC
CATALOG STANDARD

REV: 3
DATE: 12-20-05