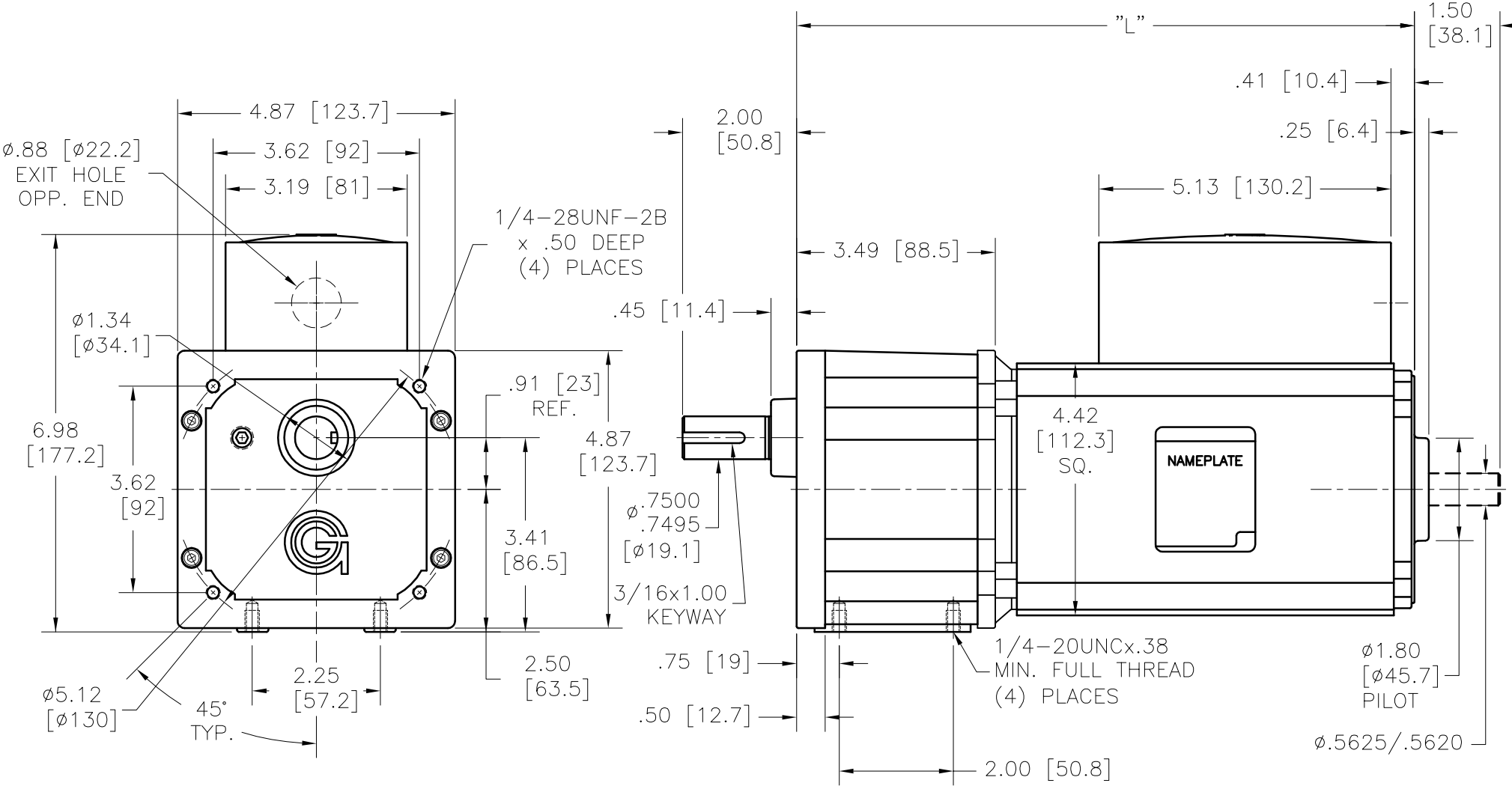

NOTES:

1. ALL DIMENSIONS ARE NOMINAL.
2. [mm] = MILLIMETERS.

MODEL	"L"
AC10060NV-PS23__	10.05 [255]
AC10080NV-PS23__	10.84 [275]

GROSCHOPP
ELECTRIC MOTORS • REDUCERS • GEAR MOTORS • MOTOR SETS

AC100__NV-PS23__

CATALOG STANDARD

REV: 4
DATE: 4-18-16