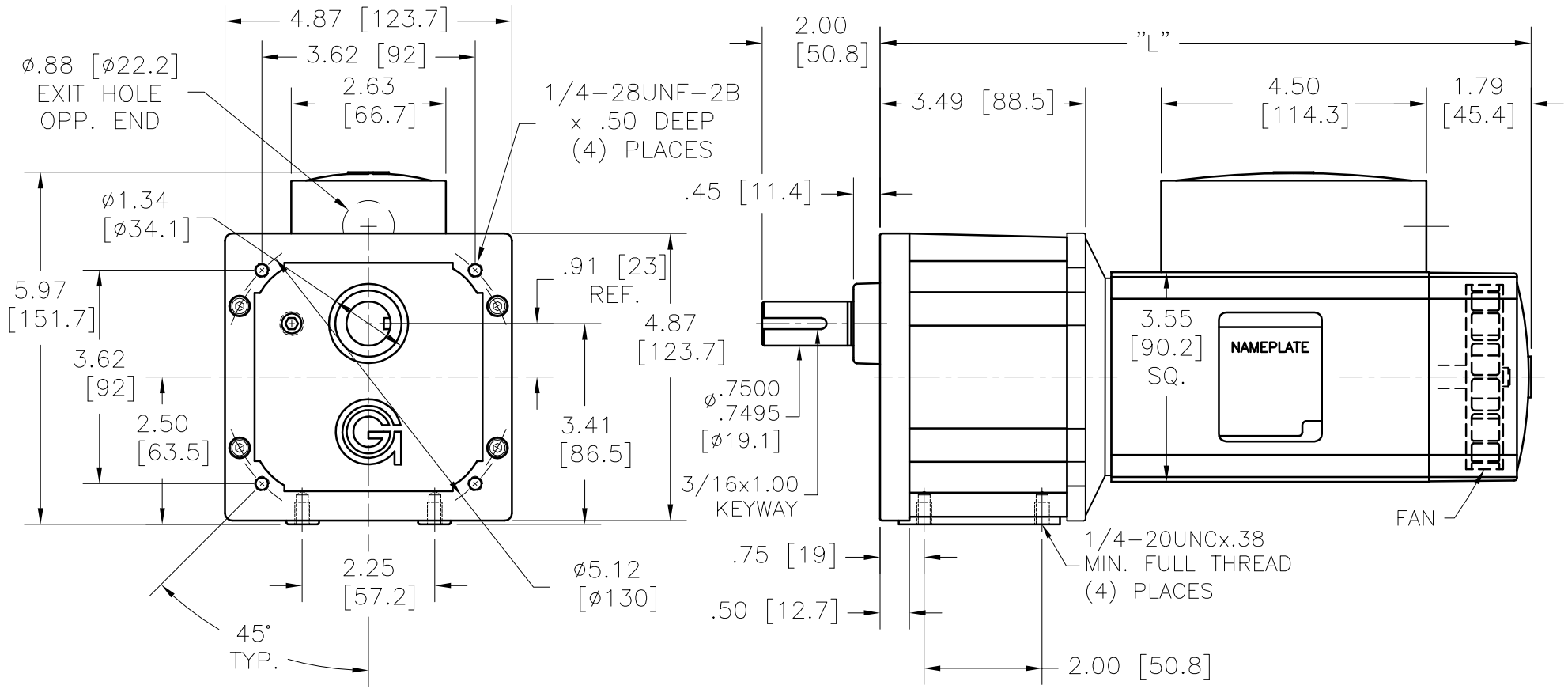

NOTES:

1. ALL DIMENSIONS ARE NOMINAL.
2. [mm] = MILLIMETERS.

MODEL	"L"
AC8040FC-PS23__	10.26 [261]
AC8060FC-PS23__	11.05 [281]

GROSCHOPP
ELECTRIC MOTORS • REDUCERS • GEAR MOTORS • MOTOR SETS

AC80__FC-PS23__
CATALOG STANDARD

REV: 4
DATE: 4-18-16