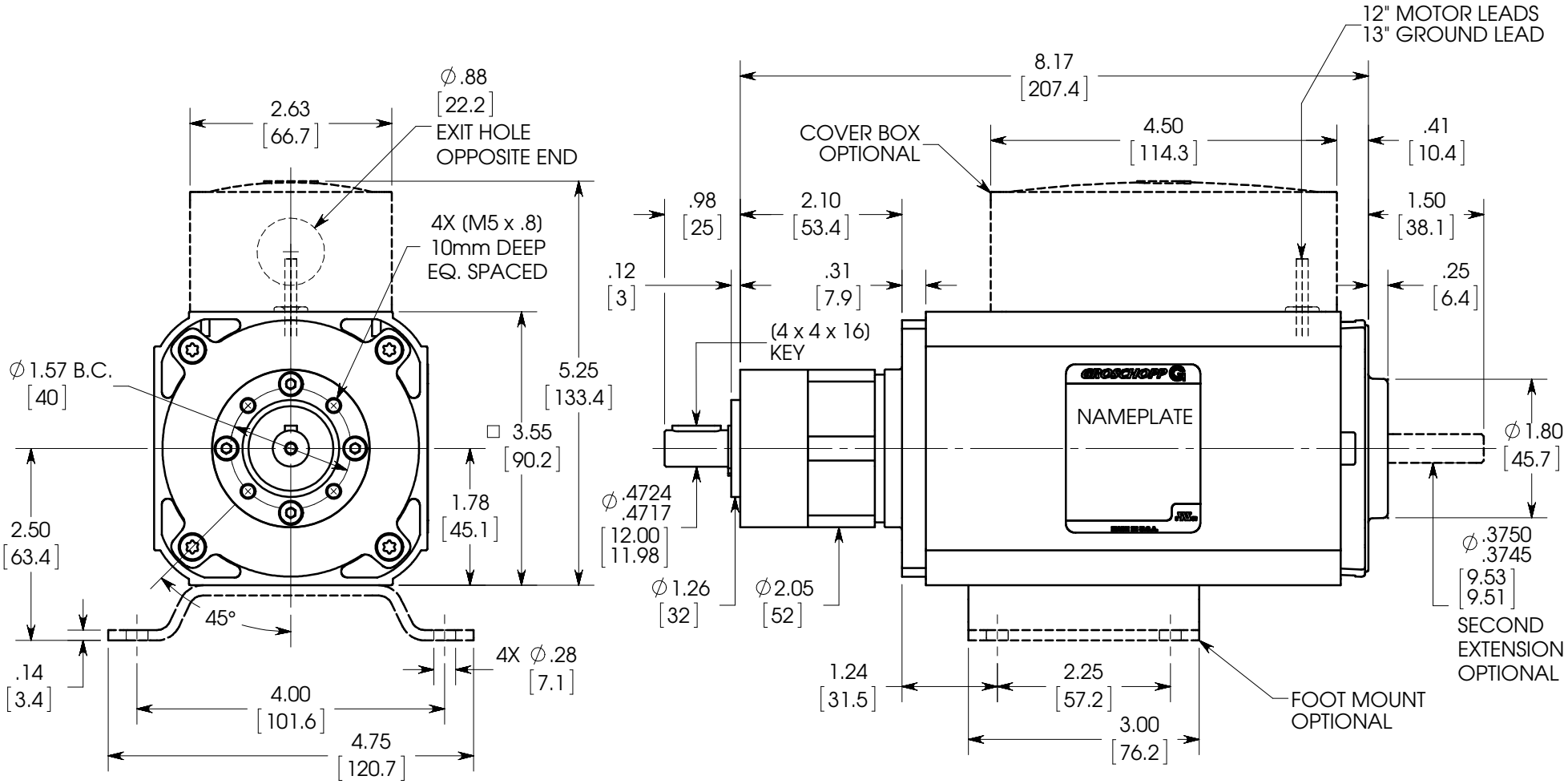

NOTES:

1. ALL DIMENSIONS ARE NOMINAL.
2. (mm) = MILLIMETERS.

REVISION	1
CHECKED	JO
DATE	12-11-13
MODEL	AC8060NV-PL52iP

THIRD ANGLE

GROSCHOPP
ELECTRIC MOTORS • REDUCERS • GEAR MOTORS • MOTOR SETS

TITLE: AC8060NV-PL52_ _iP
5:1 RATIO
CATALOG STANDARD

SCALE: 1:2 DO NOT SCALE DRAWING

SHEET 1 OF 1