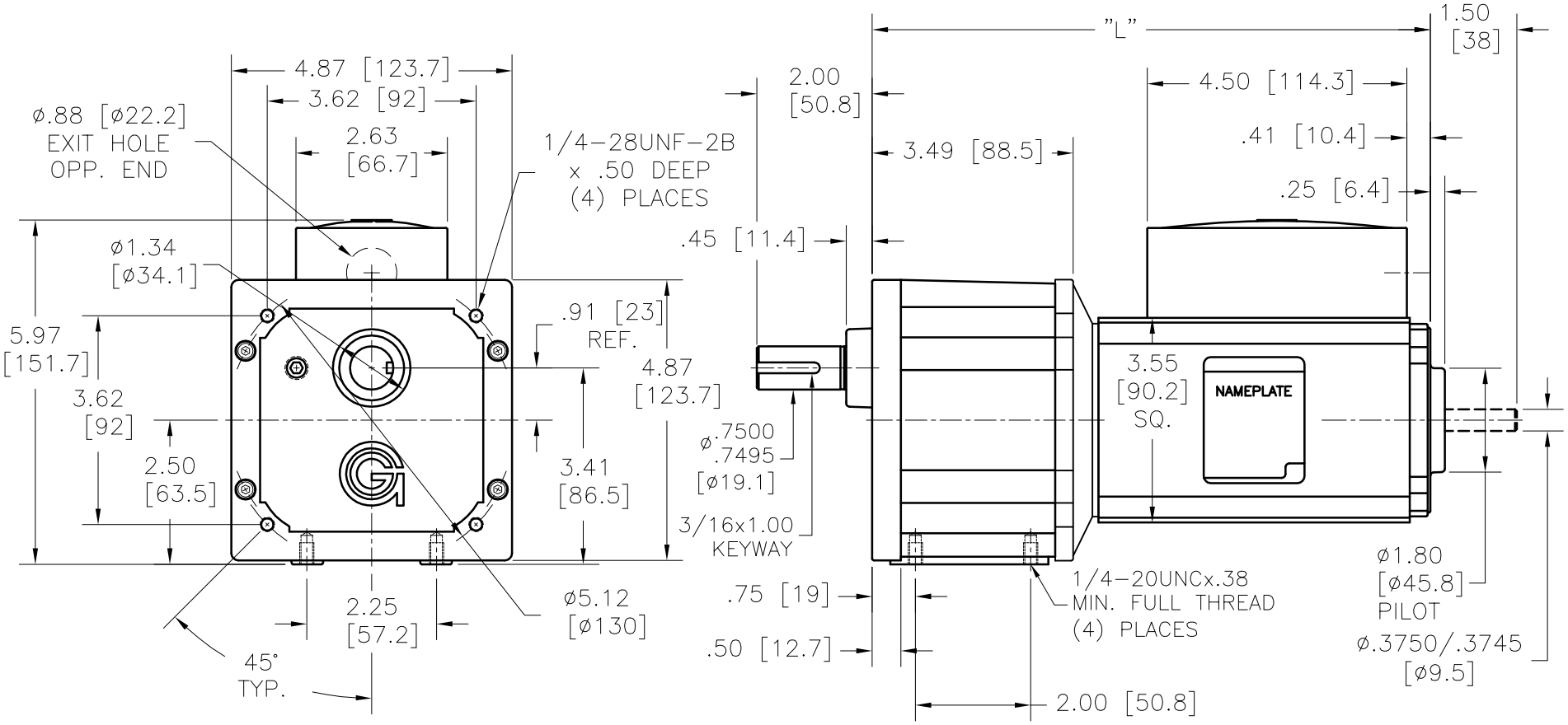

NOTES:

1. ALL DIMENSIONS ARE NOMINAL.
2. [mm] = MILLIMETERS.

MODEL	"L"
AC8040NV-PS23__	8.89 [226]
AC8060NV-PS23__	9.68 [246]

GROSCHOPP
ELECTRIC MOTORS • REDUCERS • GEAR MOTORS • MOTOR SETS

AC80__NV-PS23__

CATALOG STANDARD

REV: 4
DATE: 4-18-16