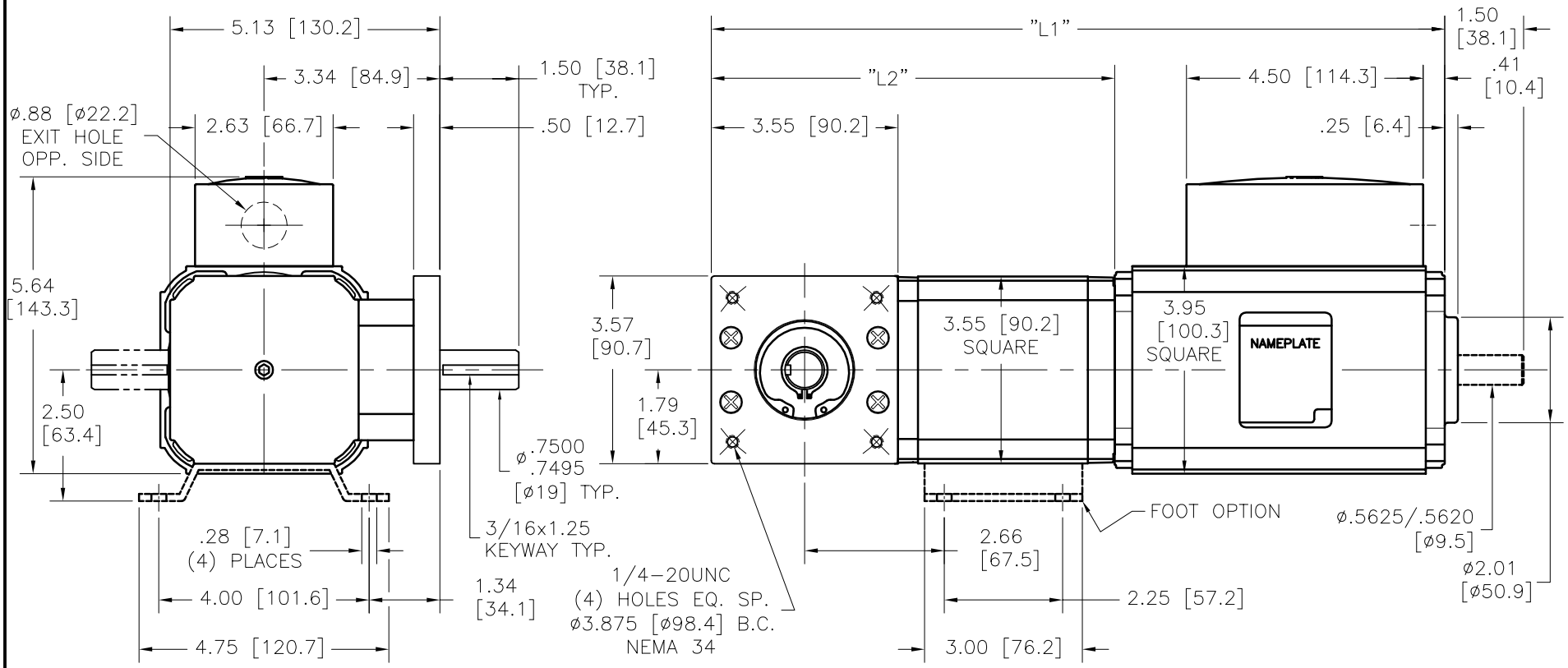

MODEL	RATIO	"L1"	"L2"
AC9060NV-RP73__	5:1 – 61:1	13.95 [354]	7.67 [195]
	90:1 – 614:1	14.56 [370]	8.28 [210]
	1000:1	15.16 [385]	8.88 [225]

NOTES:

1. ALL DIMENSIONS ARE NOMINAL.
2. [mm] = MILLIMETERS.

GROSCHOPP
ELECTRIC MOTORS • REDUCERS • GEAR MOTORS • MOTOR SETS

AC90__NV-RP73__
CATALOG STANDARD

REV: 2
DATE: 7-30-13