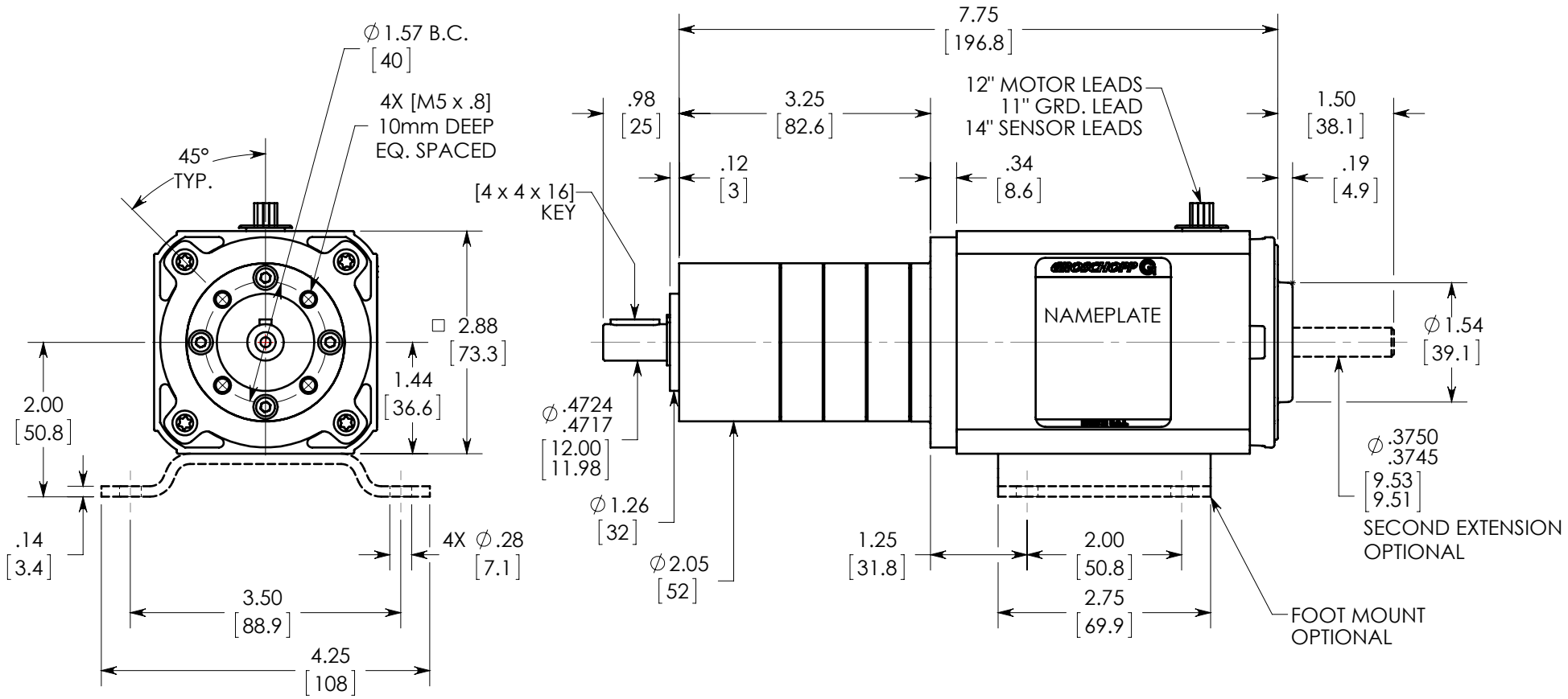

NOTES:

1. ALL DIMENSIONS ARE NOMINAL.
2. [mm] = MILLIMETERS.

REVISION	1
CHECKED	BW
DATE	3-1-13
MODEL	BL6520-PL52i

THIRD ANGLE

GROSCHOPP
ELECTRIC MOTORS • REDUCERS • GEAR MOTORS • MOTOR SETS

TITLE:
BL6520-PL52_ _i
59:1 - 308:1 RATIOS
CATALOG STANDARD

SCALE: 1:2 DO NOT SCALE DRAWING

SHEET 1 OF 1