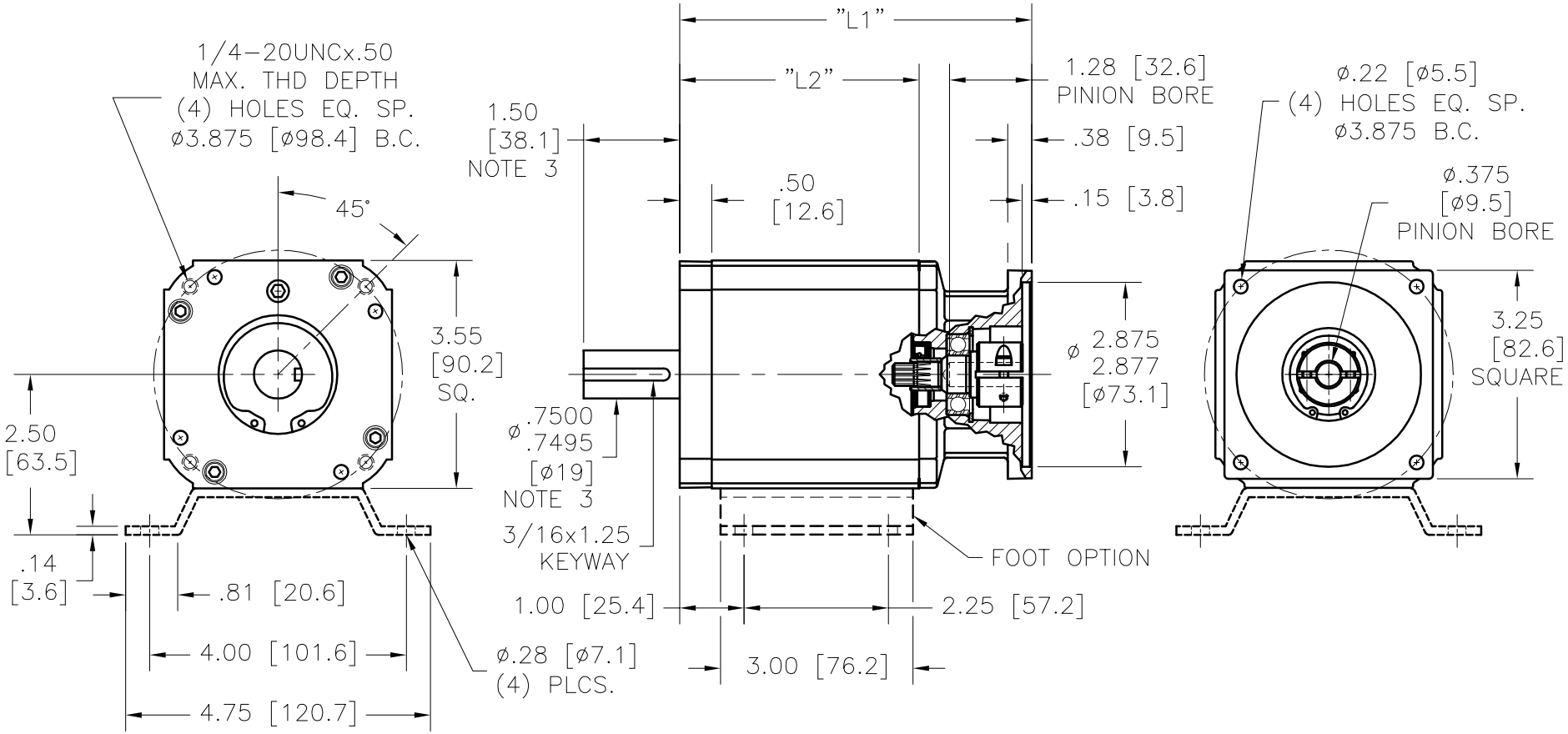

MODEL	RATIO	"L1"	"L2"
PL73__ (NEMA 34)	5:1 – 61:1	5.49 [139]	3.73 [95]
	90:1 – 614:1	6.10 [155]	4.34 [110]
	1000:1	6.70 [170]	4.94 [125]

NOTES:

1. ALL DIMENSIONS ARE NOMINAL.
2. [mm] = MILLIMETERS.
3. ADDITIONAL STANDARD SHAFT SIZES AVAILABLE UP TO ø$1\frac{1}{4}$" IN DIAMETER & 3" IN LENGTH.

GROSCHOPP
ELECTRIC MOTORS • REDUCERS • GEAR MOTORS • MOTOR SETS

PL73__
(NEMA 34)
CATALOG STANDARD

REV: 4
DATE: 12–2–13