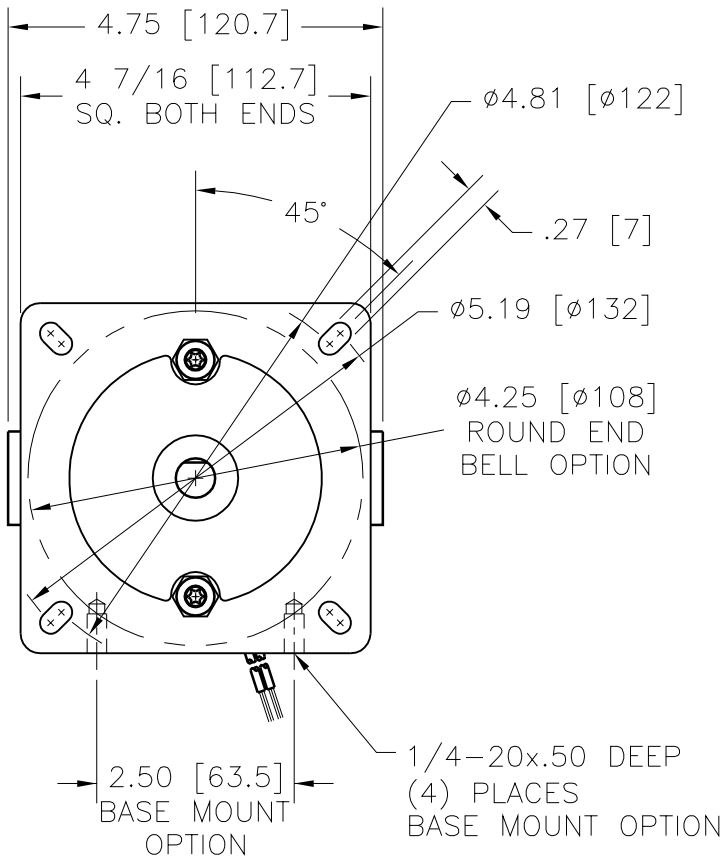


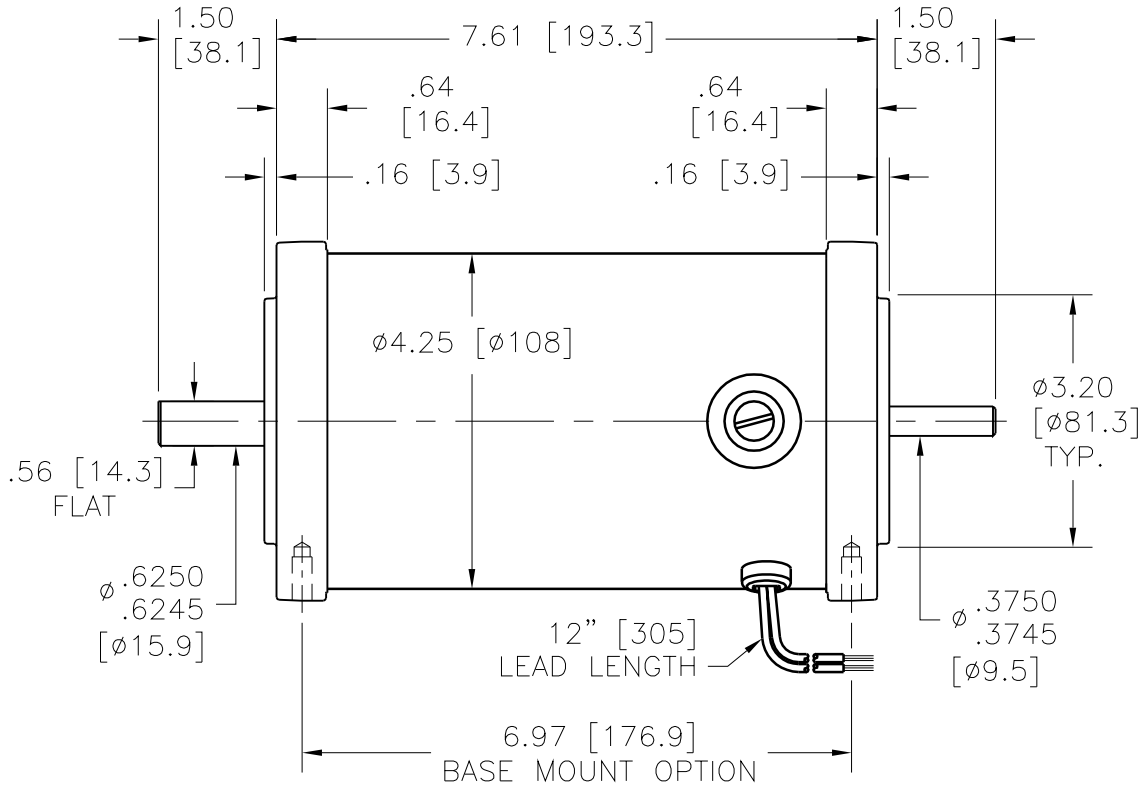


NOTES:

1. ALL DIMENSIONS ARE NOMINAL.
2. [mm] = MILLIMETERS.

GROSCHOPP
ELECTRIC MOTORS • REDUCERS • GEAR MOTORS • MOTOR SETS

PM10816
CATALOG STANDARD

REV: 4
DATE: 8-15-08