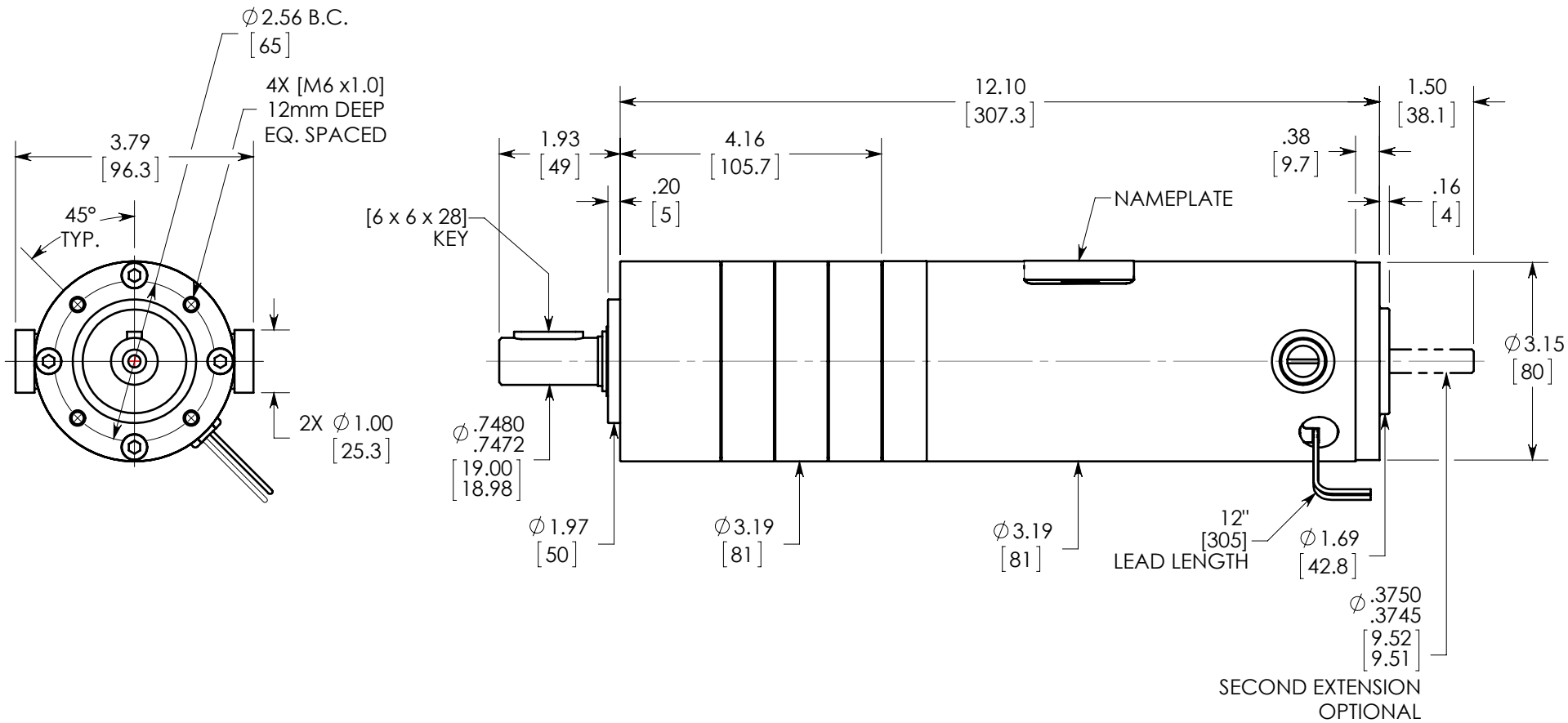

NOTES:

1. ALL DIMENSIONS ARE NOMINAL.
2. [mm] = MILLIMETERS.

REVISION	1
CHECKED	JO
DATE	5-1-13
MODEL	PM8018-PL81i, LV

THIRD ANGLE

GROSCHOPP
ELECTRIC MOTORS • REDUCERS • GEAR MOTORS • MOTOR SETS

TITLE:
PM8018-PL81_ _i
93:1 - 308:1 RATIO
CATALOG STANDARD

SCALE: 2:5 DO NOT SCALE DRAWING

SHEET 1 OF 1