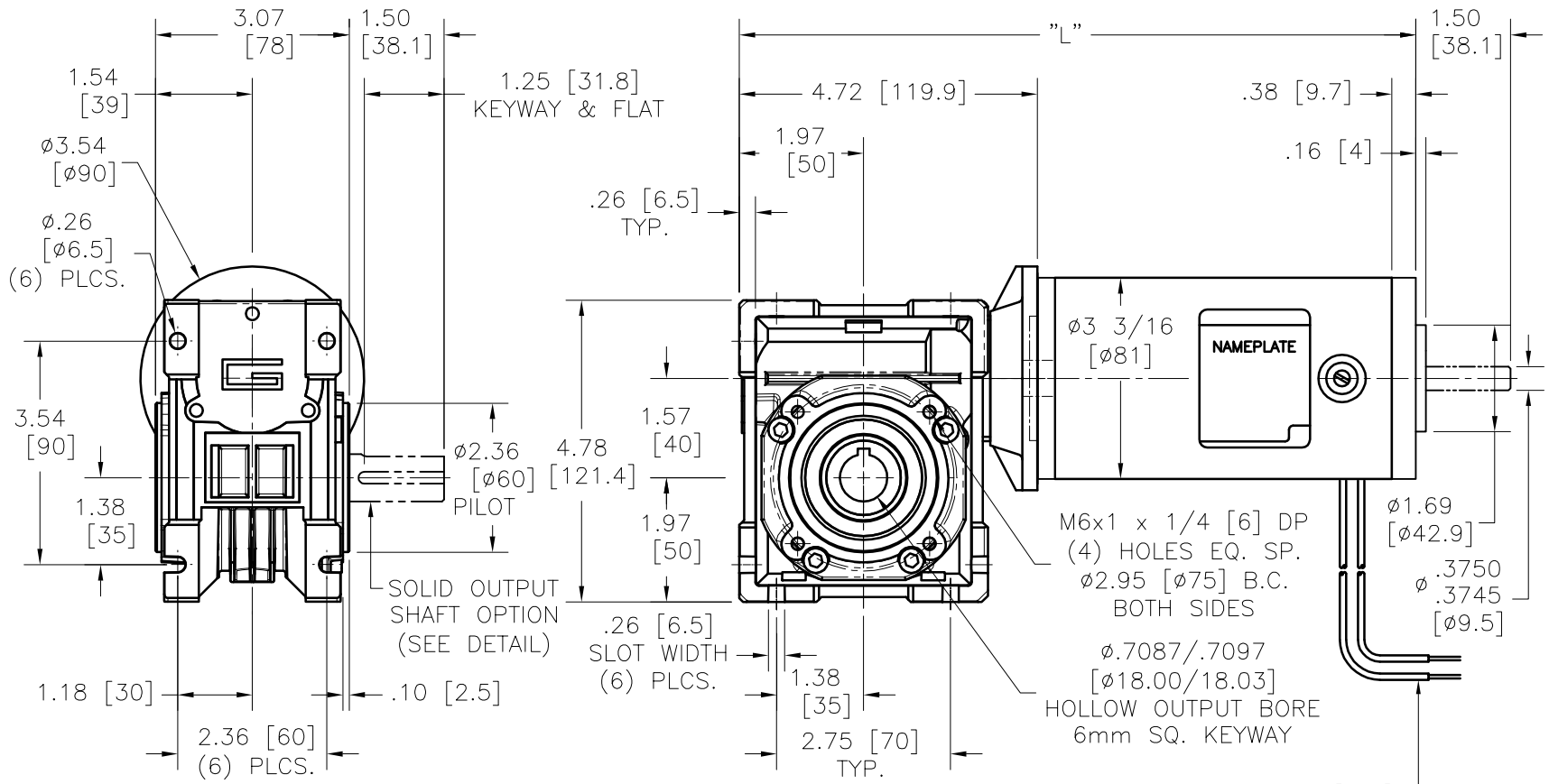

IEC SOLID OUTPUT SHAFT OPTION DETAIL

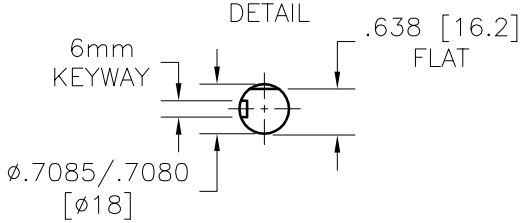

NEMA SOLID OUTPUT SHAFT OPTION DETAIL

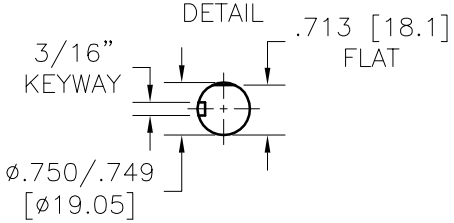

NOTES:

1. ALL DIMENSIONS ARE NOMINAL.
2. [mm] = MILLIMETERS.

MODEL	"L"
PM8014–RA40__T	10.72 [272]
PM8018–RA40__T	12.22 [310]

GROSCHOPP
ELECTRIC MOTORS • REDUCERS • GEAR MOTORS • MOTOR SETS

PM801_–RA40__T

CATALOG STANDARD

REV: 2
DATE: 6–13–17