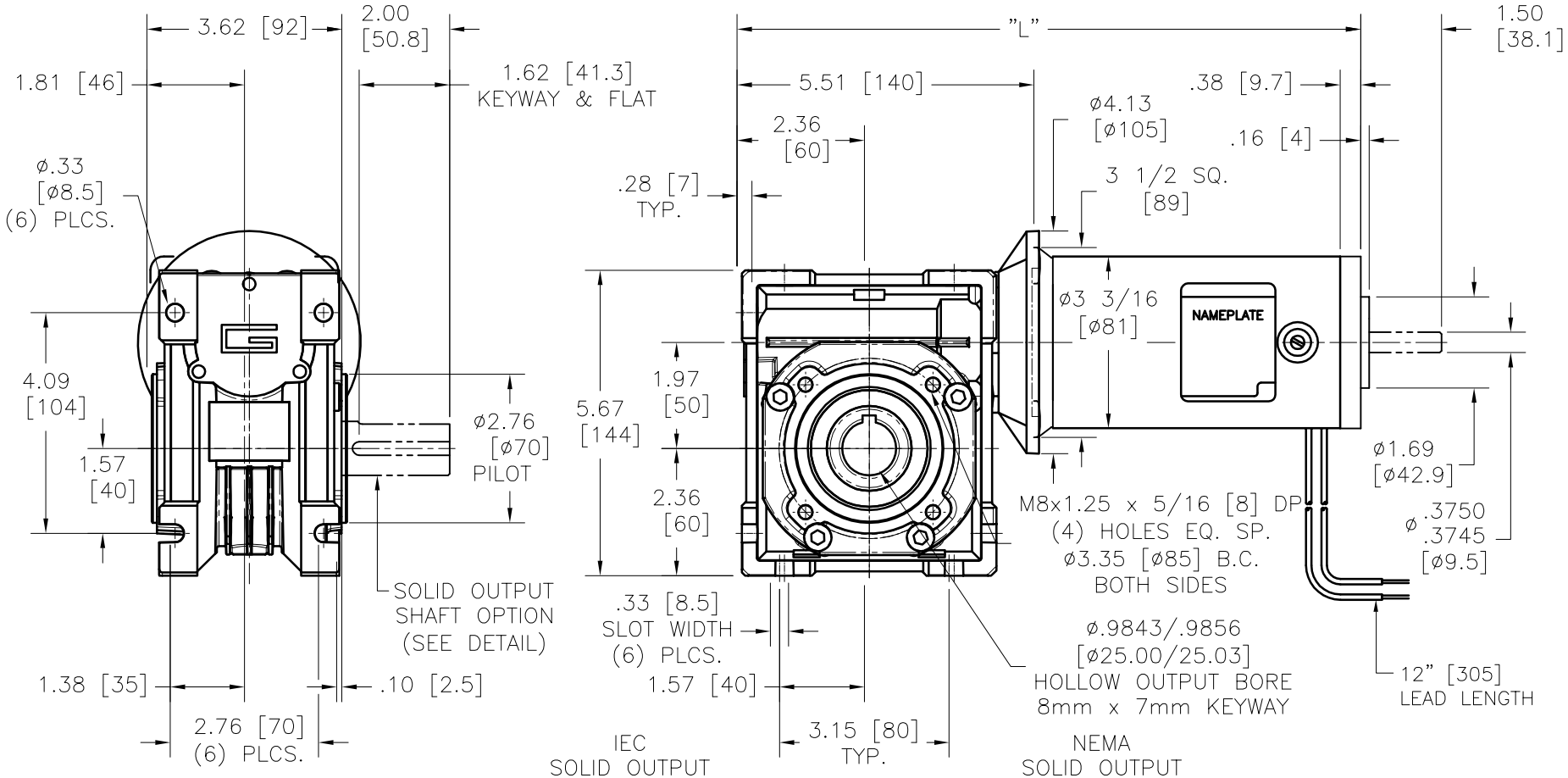

NOTES:

1. ALL DIMENSIONS ARE NOMINAL.
2. [mm] = MILLIMETERS.

MODEL	"L"
PM8014–RA50__T	11.58 [294]
PM8018–RA50__T	13.08 [332]

GROSCHOPP
ELECTRIC MOTORS • REDUCERS • GEAR MOTORS • MOTOR SETS

PM801_–RA50__T

CATALOG STANDARD

REV: 2
DATE: 6–13–17